3 Transistors

Audio Amplifier Circuits

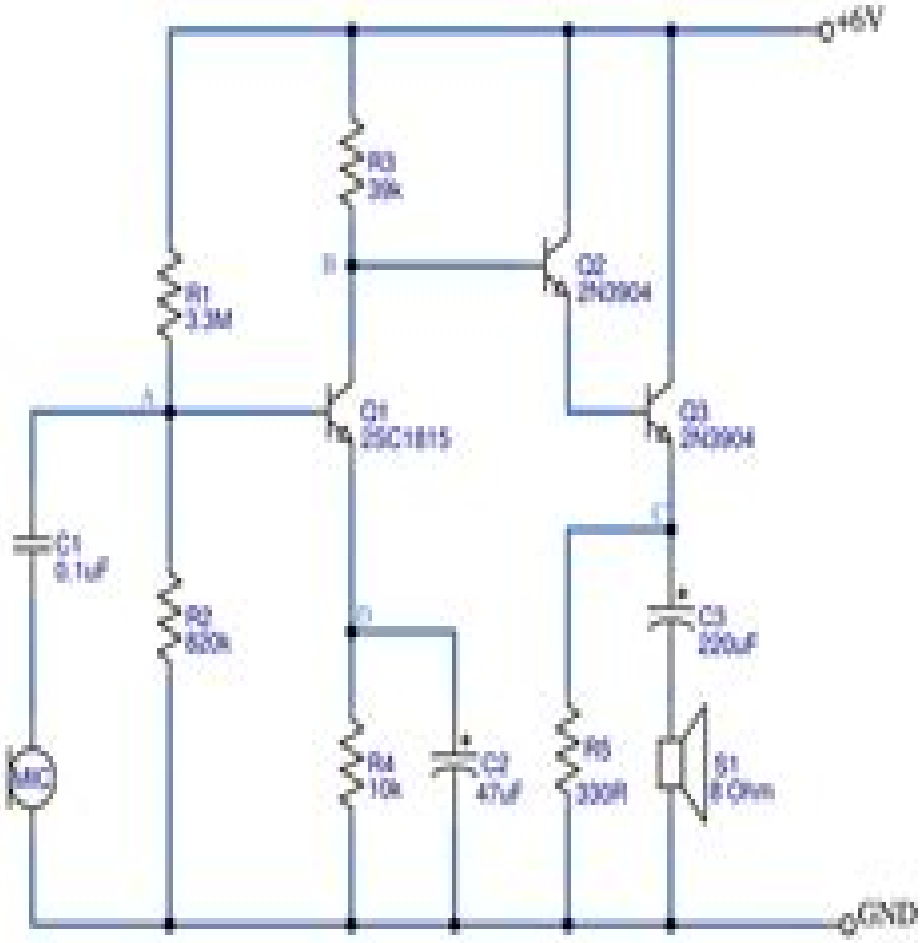

CIRCUITS DIY

Transistor Audio Amplifiers

Minjie Lin

Transistor Audio Amplifiers:

Ignite the flame of optimism with is motivational masterpiece, Find Positivity in **Transistor Audio Amplifiers** . In a downloadable PDF format (Download in PDF: *), this ebook is a beacon of encouragement. Download now and let the words propel you towards a brighter, more motivated tomorrow.

https://7seasproperty.co.uk/public/Resources/Download_PDFS/Split%20Ends%20Special%20Blends.pdf

Table of Contents Transistor Audio Amplifiers

1. Understanding the eBook Transistor Audio Amplifiers
    - The Rise of Digital Reading Transistor Audio Amplifiers
    - Advantages of eBooks Over Traditional Books
2. Identifying Transistor Audio Amplifiers
    - Exploring Different Genres
    - Considering Fiction vs. Non-Fiction
    - Determining Your Reading Goals
3. Choosing the Right eBook Platform
    - Popular eBook Platforms
    - Features to Look for in an Transistor Audio Amplifiers
    - User-Friendly Interface
4. Exploring eBook Recommendations from Transistor Audio Amplifiers
    - Personalized Recommendations
    - Transistor Audio Amplifiers User Reviews and Ratings
    - Transistor Audio Amplifiers and Bestseller Lists
5. Accessing Transistor Audio Amplifiers Free and Paid eBooks
    - Transistor Audio Amplifiers Public Domain eBooks
    - Transistor Audio Amplifiers eBook Subscription Services
    - Transistor Audio Amplifiers Budget-Friendly Options
6. Navigating Transistor Audio Amplifiers eBook Formats

- ePub, PDF, MOBI, and More
- Transistor Audio Amplifiers Compatibility with Devices
- Transistor Audio Amplifiers Enhanced eBook Features

7. Enhancing Your Reading Experience
    - Adjustable Fonts and Text Sizes of Transistor Audio Amplifiers
    - Highlighting and Note-Taking Transistor Audio Amplifiers
    - Interactive Elements Transistor Audio Amplifiers
8. Staying Engaged with Transistor Audio Amplifiers
    - Joining Online Reading Communities
    - Participating in Virtual Book Clubs
    - Following Authors and Publishers Transistor Audio Amplifiers
9. Balancing eBooks and Physical Books Transistor Audio Amplifiers
    - Benefits of a Digital Library
    - Creating a Diverse Reading Collection Transistor Audio Amplifiers
10. Overcoming Reading Challenges
    - Dealing with Digital Eye Strain
    - Minimizing Distractions
    - Managing Screen Time
11. Cultivating a Reading Routine Transistor Audio Amplifiers
    - Setting Reading Goals Transistor Audio Amplifiers
    - Carving Out Dedicated Reading Time
12. Sourcing Reliable Information of Transistor Audio Amplifiers
    - Fact-Checking eBook Content of Transistor Audio Amplifiers
    - Distinguishing Credible Sources
13. Promoting Lifelong Learning
    - Utilizing eBooks for Skill Development
    - Exploring Educational eBooks
14. Embracing eBook Trends
    - Integration of Multimedia Elements
    - Interactive and Gamified eBooks

Transistor Audio Amplifiers Introduction

In the digital age, access to information has become easier than ever before. The ability to download Transistor Audio Amplifiers has revolutionized the way we consume written content. Whether you are a student looking for course material, an avid reader searching for your next favorite book, or a professional seeking research papers, the option to download Transistor Audio Amplifiers has opened up a world of possibilities. Downloading Transistor Audio Amplifiers provides numerous advantages over physical copies of books and documents. Firstly, it is incredibly convenient. Gone are the days of carrying around heavy textbooks or bulky folders filled with papers. With the click of a button, you can gain immediate access to valuable resources on any device. This convenience allows for efficient studying, researching, and reading on the go. Moreover, the cost-effective nature of downloading Transistor Audio Amplifiers has democratized knowledge. Traditional books and academic journals can be expensive, making it difficult for individuals with limited financial resources to access information. By offering free PDF downloads, publishers and authors are enabling a wider audience to benefit from their work. This inclusivity promotes equal opportunities for learning and personal growth. There are numerous websites and platforms where individuals can download Transistor Audio Amplifiers. These websites range from academic databases offering research papers and journals to online libraries with an expansive collection of books from various genres. Many authors and publishers also upload their work to specific websites, granting readers access to their content without any charge. These platforms not only provide access to existing literature but also serve as an excellent platform for undiscovered authors to share their work with the world. However, it is essential to be cautious while downloading Transistor Audio Amplifiers. Some websites may offer pirated or illegally obtained copies of copyrighted material. Engaging in such activities not only violates copyright laws but also undermines the efforts of authors, publishers, and researchers. To ensure ethical downloading, it is advisable to utilize reputable websites that prioritize the legal distribution of content. When downloading Transistor Audio Amplifiers, users should also consider the potential security risks associated with online platforms. Malicious actors may exploit vulnerabilities in unprotected websites to distribute malware or steal personal information. To protect themselves, individuals should ensure their devices have reliable antivirus software installed and validate the legitimacy of the websites they are downloading from. In conclusion, the ability to download Transistor Audio Amplifiers has transformed the way we access information. With the convenience, cost-effectiveness, and accessibility it offers, free PDF downloads have become a popular choice for students, researchers, and book lovers worldwide. However, it is crucial to engage in ethical downloading practices and prioritize personal security when utilizing online platforms. By doing so, individuals can make the most of the vast array of free PDF resources available and embark on a journey of continuous learning and intellectual growth.

FAQs About Transistor Audio Amplifiers Books

How do I know which eBook platform is the best for me? Finding the best eBook platform depends on your reading preferences and device compatibility. Research different platforms, read user reviews, and explore their features before making a choice. Are free eBooks of good quality? Yes, many reputable platforms offer high-quality free eBooks, including classics and public domain works. However, make sure to verify the source to ensure the eBook credibility. Can I read eBooks without an eReader? Absolutely! Most eBook platforms offer webbased readers or mobile apps that allow you to read eBooks on your computer, tablet, or smartphone. How do I avoid digital eye strain while reading eBooks? To prevent digital eye strain, take regular breaks, adjust the font size and background color, and ensure proper lighting while reading eBooks. What the advantage of interactive eBooks? Interactive eBooks incorporate multimedia elements, quizzes, and activities, enhancing the reader engagement and providing a more immersive learning experience. Transistor Audio Amplifiers is one of the best book in our library for free trial. We provide copy of Transistor Audio Amplifiers in digital format, so the resources that you find are reliable. There are also many Ebooks of related with Transistor Audio Amplifiers. Where to download Transistor Audio Amplifiers online for free? Are you looking for Transistor Audio Amplifiers PDF? This is definitely going to save you time and cash in something you should think about. If you trying to find then search around for online. Without a doubt there are numerous these available and many of them have the freedom. However without doubt you receive whatever you purchase. An alternate way to get ideas is always to check another Transistor Audio Amplifiers. This method for see exactly what may be included and adopt these ideas to your book. This site will almost certainly help you save time and effort, money and stress. If you are looking for free books then you really should consider finding to assist you try this. Several of Transistor Audio Amplifiers are for sale to free while some are payable. If you arent sure if the books you would like to download works with for usage along with your computer, it is possible to download free trials. The free guides make it easy for someone to free access online library for download books to your device. You can get free download on free trial for lots of books categories. Our library is the biggest of these that have literally hundreds of thousands of different products categories represented. You will also see that there are specific sites catered to different product types or categories, brands or niches related with Transistor Audio Amplifiers. So depending on what exactly you are searching, you will be able to choose e books to suit your own need. Need to access completely for Campbell Biology Seventh Edition book? Access Ebook without any digging. And by having access to our ebook online or by storing it on your computer, you have convenient answers with Transistor Audio Amplifiers To get started finding Transistor Audio Amplifiers, you are right to find our website which has a comprehensive collection of books online. Our library is the biggest of these that have literally hundreds of thousands of different products represented. You will also see that there are specific sites catered to different categories or niches related with Transistor Audio Amplifiers So depending on what exactly you are searching, you will be able tochoose

ebook to suit your own need. Thank you for reading Transistor Audio Amplifiers. Maybe you have knowledge that, people have search numerous times for their favorite readings like this Transistor Audio Amplifiers, but end up in harmful downloads. Rather than reading a good book with a cup of coffee in the afternoon, instead they juggled with some harmful bugs inside their laptop. Transistor Audio Amplifiers is available in our book collection an online access to it is set as public so you can download it instantly. Our digital library spans in multiple locations, allowing you to get the most less latency time to download any of our books like this one. Merely said, Transistor Audio Amplifiers is universally compatible with any devices to read.

Find Transistor Audio Amplifiers :

split ends special blends
~~spider-man the adventures of spider-man~~
~~spetsificheskie osobennosti ran na flote injuries peculiarities in navy~~
spirit of early christian thought
spins really wild africa tour
spiking neuron models single neurons populations plasticity
spirit lake
~~spirit of genius art at the wadsworth~~
spirituality and mental health care
spirit of the wilderness
spirit of findhorn
spirit of an age subtitle nineteenthcentury paintings from the nationalgalerie berlin
spirit of loveliness
spinors in physics and geometry trieste 1113 sept 1986
~~spoken portuguese spoken portuguese~~

Transistor Audio Amplifiers :

filmcraft cinematography english edition kindle edition amazon de - Jul 26 2022
web filmcraft cinematography english edition ebook goodridge mike grierson tim amazon de kindle store
filmcraft producing english edition format kindle amazon fr - Nov 29 2022

web achetez et téléchargez ebook filmcraft producing english edition boutique kindle direction production amazon fr
filmcraft production design english edition kindle edition amazon de - Mar 02 2023
web filmcraft production design english edition ebook halligan fionnuala amazon de kindle store
filmcraft producing kindle edition amazon com - May 04 2023
web jan 21 2013 filmcraft producing kindle edition by macnab geoffrey swart sharon download it once and read it on your kindle device pc phones or tablets use features like bookmarks note taking and highlighting while reading filmcraft producing
zendaya to star as cleopatra in denis villeneuve s historical epic - Mar 22 2022
web 5 hours ago production will start in 2024 villeneuve himself expressed his excitement about the project in an interview last year stating i also have a historical film project on the life of cleopatra
film craft meaning and definition topmeaning com - Apr 22 2022
web usually uncountable plural film crafts the art or craft of making movie s cinematography
filmcraft editing english edition versión kindle amazon es - Sep 27 2022
web the filmcraft series is a ground breaking study of the art of filmmaking the most collaborative and multidisciplinary of all the arts each volume covers a different aspect of moviemaking offering in depth interviews with a host
filmcraft producing english edition kindle edition amazon de - Jun 05 2023
web filmcraft producing english edition ebook macnab geoffrey swart sharon amazon de kindle store
minecraft film 2025 beyazperde com - May 24 2022
web 3 4 yönetmen martin scorsese oyuncular leonardo dicaprio lily gladstone robert de niro fragman vizyondaki en İyi filmler Özet minecraft dünyayı büyük bir yıkıma uğratacak olan ender dragon u durdurmak ve dünyayı kurtarmak için zorlu bir maceraya atılan genç bir kız ve arkadaş grubunun hikayesini konu ediyor
filmcraft producing geoffrey macnab sharon swart google - Oct 09 2023
web while few film producers are household names they wield a degree of control that only the biggest name directors can aspire to as with all of the filmcraft titles this book is based on new
filmcraft producing geoffrey macnab sharon swart google - Jul 06 2023
web while few film producers are household names they wield a degree of control that only the biggest name directors can aspire to as with all of the filmcraft titles this book is based on new indepth interviews and features such greats as tim bevan marin karmitz jeremy thomas jon kilik lauren shuler donner jan chapman and peter aalbæk
filmcraft production design english edition kindle ausgabe amazon de - Dec 31 2022
web filmcraft production design english edition ebook halligan fionnuala amazon de kindle shop

editions of filmcraft producing by geoffrey macnab goodreads - Sep 08 2023
web editions for filmcraft producing 0240823745 paperback published in 2013 1781570493 kindle edition published in 2013 kindle edition published in home my books
filmcraft producing anglais by macnab goodreads - Feb 01 2023
web nov 1 2012 responsible for hiring all the members of cast and crew from director on downwards the producer must also secure financial backing and oversee the development of the script this book explores the professional s role within the art and the industry through interviews and visual material
filmcraft producing english edition kindle ausgabe amazon de - Apr 03 2023
web filmcraft producing english edition ebook macnab geoffrey swart sharon amazon de kindle shop
filmcraft production design fionnuala halligan google books - Oct 29 2022
web oct 8 2012 in production design 16 production designers share their insights anecdotes and technical achievements through a series of exclusive interviews fascinating for both film fans and
filmcraft definition and meaning wordnik - Jun 24 2022
web boyle s kinetic crazy quilt visual style combined with an ever twisting storyline has a defined a sort of contemporary filmcraft brad balfour director danny boyle creates a slumdog millionaire and serious oscar buzz 2008 i like hearing about why certain things are they way they are and how the film got made as filmcraft
filmcraft editing english edition kindle edition amazon de - Aug 27 2022
web filmcraft editing english edition ebook chang justin amazon de kindle store
filmcraft producing geoffrey macnab sharon swart google - Aug 07 2023
web filmcraft producing geoffrey macnab sharon swart google books responsible for hiring all members of cast and crew from the director onwards the producer s role is central to the making of any film and responsibilities can include everything from script development to securing financing to masterminding a film s marketing campaign
film craft ne demek film craft türkçesi ne demek ingilizce film craft - Feb 18 2022
web film craft türkçesi film craft nedir sinema sinemacılık film craft ingilizcede ne demek film craft nerede nasıl kullanılır film boş film Çevirmek film kaplamak yaygı Çok ince ve yeğni kabuk ya da katman Çevirim eylemi
star comics rocky joe perfect edition nr 5 - Aug 25 2022
web books shelved as rocky joe rocky joe perfect edition vol 1 by tetsuya chiba rocky joe perfect edition vol 13 by tetsuya chiba rocky joe perfect
rocky joe perfect edition 5 2023 stage gapinc - Apr 20 2022
web may 31 2017 perfect edition chiba tetsuya takamori asao on amazon com free shipping on qualifying offers rocky joe

serie rockyjoe books goodreads - Jan 30 2023
web buy rocky joe perfect edition by chiba tetsuya takamori asao capriati m isbn 9788822607225 from amazon s book store everyday low prices and free delivery on eligible orders
rocky joe books goodreads - Jul 24 2022
web una fantastica perfect edition per veder brillare nuovamente un intramontabile stella della boxe tredici corposi volumi con un nuovo adattamento grafico e testi ancor più fedeli all originale per ripercorrere la parabola umana e sportiva di un personaggio entrato
rocky joe perfect edition kağıt kapak 4 nisan 2017 - Jun 03 2023
web rocky joe perfect edition chiba tetsuya takamori asao amazon com tr Çerez tercihlerinizi seçin Çerez bildirimimizde detaylandırıldığı üzere satın alım yapmanızı sağlamak alışveriş deneyiminizi geliştirmek ve hizmetlerimizi sunmak için gerekli olan
tetsuya chiba author of rocky joe perfect edition - Apr 01 2023
web jul 5 2017 amazon com rocky joe perfect edition 9788822606259 chiba tetsuya takamori asao books
star comics rocky joe perfect edition - Oct 27 2022
web feb 27 2018 amazon com rocky joe perfect edition 9788822609380 chiba tetsuya takamori asao books
rocky joe perfect edition paperback july 5 2017 amazon com - Feb 28 2023
web books shelved as serie rockyjoe rocky joe perfect edition vol 10 by tetsuya chiba rocky joe perfect edition vol 13 by tetsuya chiba rocky joe p
rocky joe perfect edition series by tetsuya chiba goodreads - Jul 04 2023
web una fantastica perfect edition per veder brillare nuovamente un intramontabile stella della boxe tredici corposi volumi con un nuovo adattamento grafico e testi ancor più fedeli all originale per ripercorrere la parabola umana e sportiva di un personaggio entrato
rocky joe perfect edition amazon co uk chiba tetsuya - Dec 29 2022
web may 3 2017 buy rocky joe perfect edition by chiba tetsuya takamori asao capriati m isbn 9788822605702 from amazon s book store everyday low prices and free delivery on eligible orders
rocky joe perfect edition 5 mangayo it - Jun 22 2022
web tetsuya chiba has 449 books on goodreads with 3631 ratings tetsuya chiba s most popular book is rocky joe perfect edition vol 1 ashita no joe new ed
rocky joe perfect edition vol 5 by tetsuya chiba goodreads - Oct 07 2023
web jul 31 2000 4 63 63 ratings2 reviews la palestra di danpei ha ottenuto la licenza e joe ha fatto il suo ingresso nel

pugilato professionistico disputando il suo primo incontro ufficiale con wolf il feroce lupo dell asia boxing club sconfiggerlo è la condizione necessaria

rocky joe perfect edition vol 5 amazon com au - Sep 06 2023

web rocky joe perfect edition vol 5 chiba tetsuya takamori asao capriati manuela amazon com au books

rocky joe perfect edition paperback 3 may 2017 amazon co uk - Nov 27 2022

web jan 3 2018 una fantastica perfect edition per veder brillare nuovamente un intramontabile stella della boxe tredici corposi volumi con un nuovo adattamento grafico e testi ancor più fedeli all originale per ripercorrere la parabola umana e sportiva di un

rocky joe perfect edition vol 5 copertina flessibile - Aug 05 2023

web perfect edition vol 5 di chiba tetsuya takamori asao capriati manuela spedizione gratuita per i clienti prime e per ordini a partire da 29 spediti da amazon amazon it rocky joe perfect edition vol 5 chiba tetsuya takamori asao capriati manuela libri

rocky joe perfect edition İtalyanca kağıt kapak amazon com tr - May 02 2023

web rocky joe perfect edition chiba tetsuya takamori asao amazon com tr Çerez tercihlerinizi seçin alışveriş deneyiminizi geliştirmek hizmetlerimizi sunmak müşterilerin hizmetlerimizi nasıl kullandığını anlayarak iyileştirmeler yapabilmek ve ilgi alanlarına göre

books by tetsuya chiba author of rocky joe perfect edition - May 22 2022

web rocky joe perfect edition 5 the man in the high castle small press record of books in print backpacker breaking point cold wind rocky joe perfect edition the official major league baseball fact book 1999 edition year book trotting and pacing the great

rocky joe perfect edition paperback february 27 2018 - Sep 25 2022

web jul 5 2017 serie rocky joe perfect edition data di pubblicazione 05 07 2017 formato 14 5x21 b n pagine 368

rocky joe perfect edition chiba tetsuya takamori asao - Mar 20 2022

summer of lost and found amazon com - Jan 28 2022

web may 23 2017 nell dare isn t all too excited about spending the summer at roanoke island especially with her father suddenly having flown off to london but over the course of the summer she begins a search for artifacts belonging to the lost colonists and the adventure makes the summer awesome

the summer of lost and found the beach house amazon com - Feb 26 2022

web may 11 2021 audio cd cd may 11 2021 a timely tender and compassionate tale of perseverance love and the bonds of family in the face of tremendous and sometimes painful upheaval in this latest novel in the new york times bestselling beach

house series

the summer of lost and found the beach house hardcover - May 12 2023

web may 11 2021 poignant and moving the summer of lost and found is a novel of growing up saying goodbye to the past and learning to ask yourself the hard questions including one of the most vital of all who do you really want to be kristin harmel new york times bestselling author

the summer of lost and found the beach house book 7 - Jul 14 2023

web may 11 2021 poignant and moving the summer of lost and found is a novel of growing up saying goodbye to the past and learning to ask yourself the hard questions including one of the most vital of all who do you really want to be kristin harmel new york times bestselling author

new novel the summer of lost and found mary alice monroe - Dec 27 2021

web in stores may 11 2021 pre order now this is my 27 th book but writing the summer of lost and found has been a different journey for me i didn t set the story against a backdrop of a new species rather as i ve been sheltering in place this year my attention was directed to the fascinating even exotic critters living in my own back

the summer of lost and found the beach house amazon com - Apr 11 2023

web may 10 2022 poignant and moving the summer of lost and found is a novel of growing up saying goodbye to the past and learning to ask yourself the hard questions including one of the most vital of all who do you really want to be kristin harmel new york times bestselling author

summer of lost and found paperback barnes noble - Apr 30 2022

web may 23 2017 rebecca behrens lives and writes in new york city where she also works as a textbook editor she is the author of when audrey met alice which bookpage called a terrific work of blended realistic and historical fiction summer of lost and found which kirkus reviews said this blend of history with mystery and fantasy with realism is a good

the summer of lost and found apple books - Oct 05 2022

web may 11 2021 the new york times bestselling beach house series continues with this timely tender and compassionate tale of perseverance love and the bonds of family in the face of tremendous and sometimes painful upheaval the coming of spring usually means renewal but for li

the summer of lost and found mary alice monroe google - Sep 04 2022

web may 11 2021 the summer of lost and found mary alice monroe simon and schuster may 11 2021 fiction 368 pages a timely tender and compassionate tale of perseverance love and the bonds of family in

the summer of lost and found mary alice monroe google - Jun 01 2022

web may 11 2021 poignant and moving the summer of lost and found is a novel of growing up saying goodbye to the past

and learning to ask yourself the hard questions including one of the most vital of all who do you really want to be kristin harmel new york times bestselling author

the summer of lost and found by mary alice monroe scribd - Mar 30 2022

web the new york times bestselling beach house series continues with this timely tender and compassionate tale of perseverance love and the bonds of family in the face of tremendous and sometimes painful upheaval the coming of spring usually means renewal but for linnea rutledge this spring is only bringing challenges linnea faces a layoff from the

summer of lost and found rebecca behrens author - Aug 03 2022

web this mix of historical and realistic fiction with a touch of a ghost story makes for a good summer read houston family magazine summer of lost and found is an interesting read on many levels the historical details about

summer of lost and found simon schuster - Feb 09 2023

web summer of lost and found by rebecca behrens from the author of when audrey met alice comes a sweeping middle grade novel about a city girl forced to spend summer of lost and found book by rebecca behrens official publisher page simon schuster

the summer of lost and found book by mary alice monroe - Jul 02 2022

web poignant and moving the summer of lost and found is a novel of growing up saying goodbye to the past and learning to ask yourself the hard questions including one of the most vital of all who do you really want to be kristin harmel new york times bestselling author

the summer of lost and found by mary alice monroe scribd - Jan 08 2023

web poignant and moving the summer of lost and found is a novel of growing up saying goodbye to the past and learning to ask yourself the hard questions including one of the most vital of all who do you really want to be kristin harmel new york times bestselling author

the summer of lost and found mary alice monroe - Jun 13 2023

web add on goodreads the nationally bestselling beach house series returns with this tender and compassionate novel following the historic rutledge family of charleston south carolina as they face a summer of upheaval and change with perseverance a spirit of unity and a dose of humor

summer of lost and found kirkus reviews - Nov 06 2022

web may 24 2016 summer of lost and found by rebecca behrens release date may 24 2016 the mystery of the lost colony of roanoke becomes an engaging backdrop for a preteen experiencing her own losses nell dare has her summer all planned she ll take tennis lessons with her bff and stay with her writer father in their new york city

the summer of lost and found barnes noble - Dec 07 2022

web may 10 2022 overview the new york times bestselling beach house series continues with this timely tender and compassionate tale of perseverance love and the bonds of family in the face of tremendous and sometimes painful upheaval the coming of spring usually means renewal but for linnea rutledge this spring is only bringing challenges

the summer of lost and found goodreads - Aug 15 2023

web may 11 2021 mary alice monroe 3 88 9 360 ratings1 049 reviews the beach house series returns with this tender and compassionate novel following the historic rutledge family of charleston south carolina as they face a summer of upheaval and change with perseverance a spirit of unity and a dose of humor

review the summer of lost and found by mary alice monroe audio - Mar 10 2023

web may 14 2021 the new york times best selling beach house series returns with this tender and compassionate novel following the rutledge family as they face a summer of upheaval and change with perseverance unity and a dose of humor discovering unexpected joys and lessons that will endure long past the season